44487031

Power Supply

PS904

Installation Instructions

⚠ DANGER ⚠

To avoid risk of electric shock, turn off AC power before installing or servicing PS904 power supply

These instructions cover the following parts:

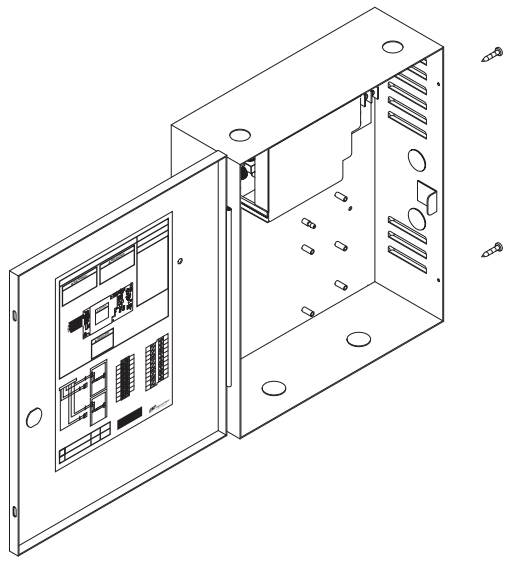

PS904 Power Supply - Pages 1-3

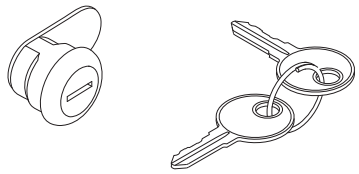

900-KL Keylock (optional) - Page 2

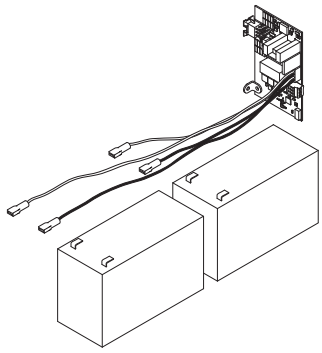

900-BB Battery Backup (optional) - Page 3

PS904 Power Supply Specifications:

Input	120/240 VAC, 1.7 A, 50/60Hz, High Voltage Class 1 Wiring Required	
Output	4 Amp DC @ 12/24 VDC	
Enclosure	14” H x 12” W x 4” D (8 knockouts, 1/2” or 3/4”)	
Temperature Range	32°-120° F (0°- 49° C)	
Fuse	F1, T4A 250 VAC **⚠ CAUTION ⚠** **For protection against risk of fire, replace fuse with same type and rating**	
Compliance	UL 294, ULC-S318, RoHS, & FCC Part 15, Class 2 Output	
Compatible Boards (Optional, 2 boards maximum)	900-2RS	INST. INSTRUCTIONS - 24125007
	900-4R	INST. INSTRUCTIONS - 44487106
	900-4RL	INST. INSTRUCTIONS - 44487080
	900-8F	INST. INSTRUCTIONS - 44487106
	900-8P	INST. INSTRUCTIONS - 44487106
Fire Alarm Input Board (Optional)	900-FA (Requires one option board above)	INST. INSTRUCTIONS - 44487072
Battery Backup Board (Optional)	900-BB	INST. INSTRUCTIONS - 44487064

Mounting Notes

The PS904 must be installed in accordance with the article 760 of the National Electrical Code or NFPA 72, Canadian Electrical Code, or any other applicable codes.

Install the PS904 indoors within the protected premises.

Check national and local codes for additional installation requirements.

Enclosure must be firmly mounted to a solid surface using hardware suitable for the surface.

1 Mount Power Supply

1a Mark 2 Top Holes

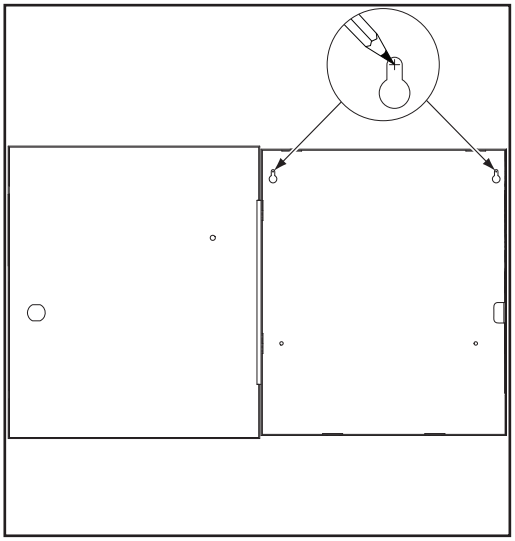

1b Secure Enclosure with 4 Screws

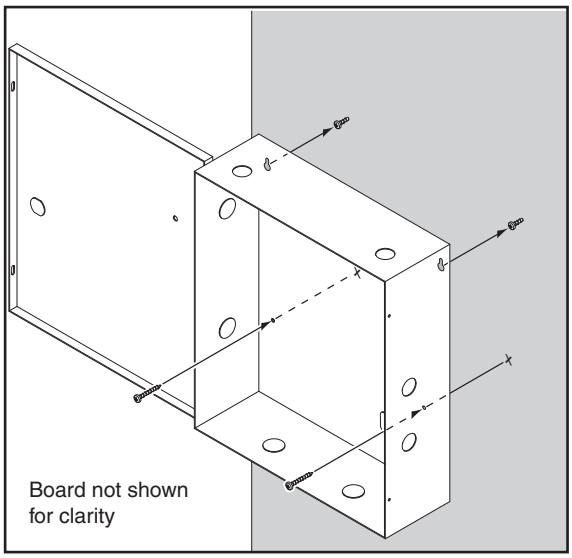

2 Secure enclosure door

If No Keylock

Enclosure will be secured with 2 screws as shown (done as last step)

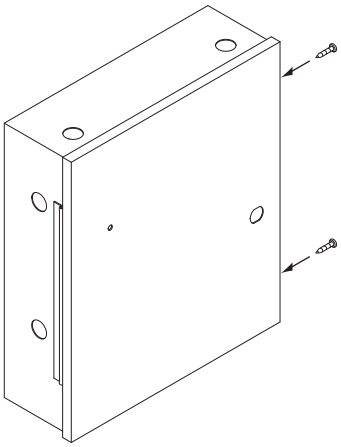

OR

If Keylock

Remove knockout and insert key cylinder, then slide in clip

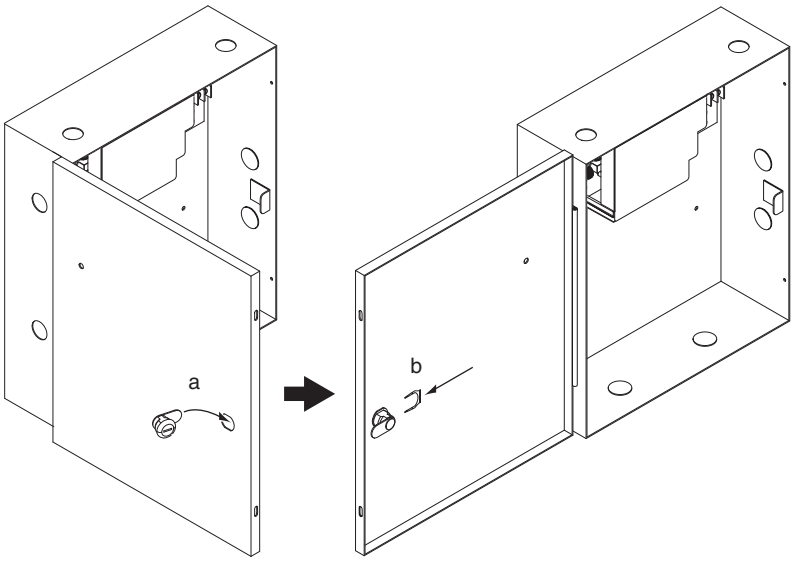

3 PS904 setup and testing

3a Connect AC Wiring

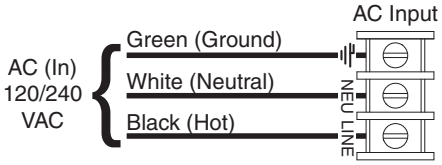

⚠ DANGER ⚠

Ensure AC breaker is turned off

3b Use Jumper to Select 24 VDC or 12 VDC Output

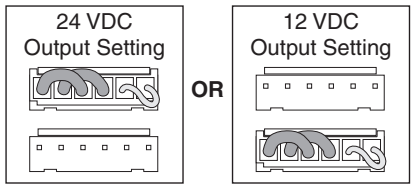

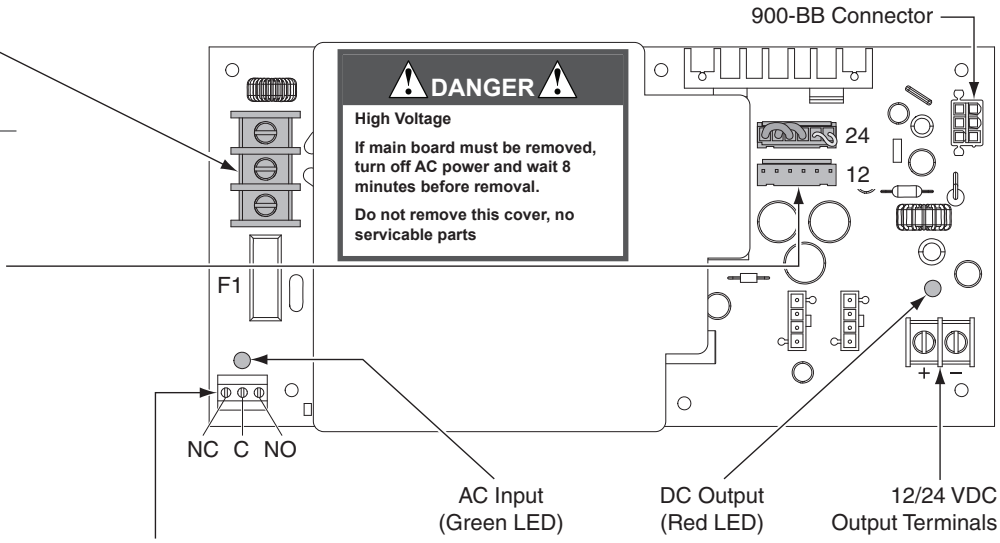

⚠ DANGER ⚠

High Voltage

If main board must be removed, turn off AC power and wait 8 minutes before removal.

Do not remove this cover, no servicable parts

⚠ DANGER ⚠

If AC LED is off, turn AC breaker prior to checking F1 fuse

Note: Minimum of 1/4" separation between AC and DC wiring as well as power limited and non-power limited.

4 Install 900-BB battery backup (if included)

Refer to 900-BB Instructions

1a Place Batteries in Box with Terminals to the Left

1b Attach Wires from Battery Board
Red wires = (+)
Black wires = (-)

Note: Allow 24 hours for batteries to fully charge

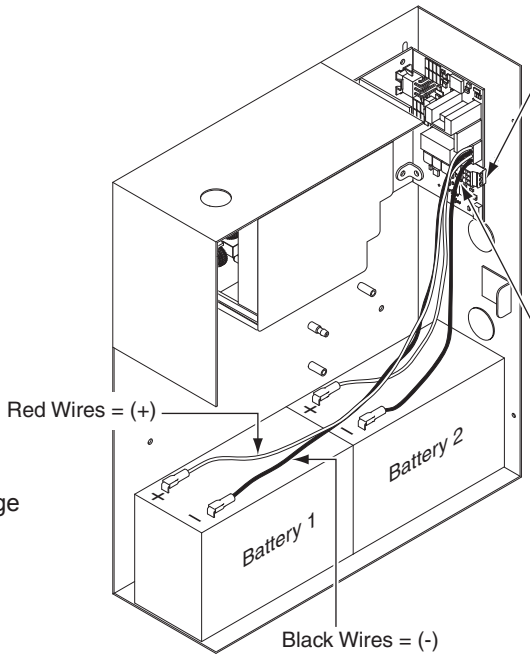

Battery Supervision Terminals
(Form C Dry Contacts)

(Shown AC Off)

Active	Inactive
AC On	AC Off

BB LED
(Amber)

On-Solid	On-Blinking
AC On Batteries Charging	AC Off Batteries Supplying Power

5 Turn on AC breaker to test power supply

Verify AC LED is On = GREEN
Verify DC LED is On = RED
Verify BB LED (if applicable) is On = AMBER

Option Boards

Refer to appropriate instructions if any board shown below is factory-installed

⚠ DANGER ⚠

Ensure AC breaker is turned off when installing wiring or option boards

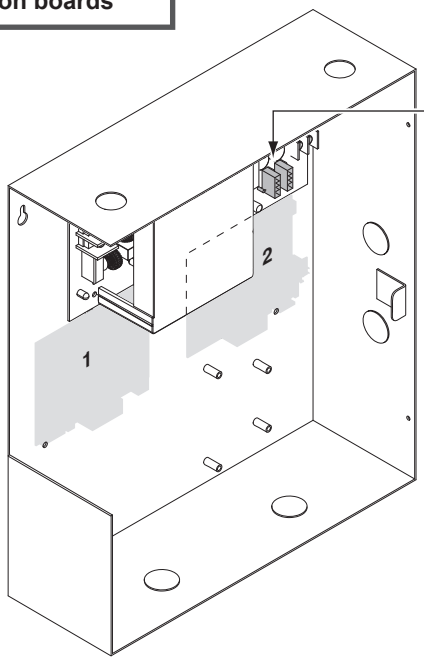

Option Boards may be Plugged into either Option Connector

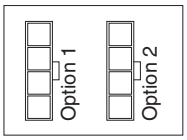

• See option board installation instructions for wiring info

Available option boards:

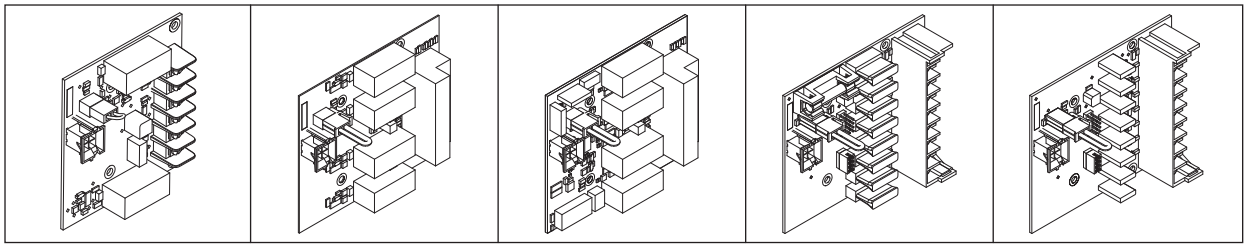

900-2RS (2 Relay)	900-4R (4 Relay)	900-4RL (4 Relay w/logic)	900-8F (8 Zone Distribution-fuse)	900-8P (8 Zone Distribution-PTC)

Note: When installation is complete, secure enclosure door with screws (provided) or keylock.

Customer Service
1-877-671-7011 www.allegion.com/us

ALLEGION

Printed in U.S.A.
44487031 Rev. 06/14-d

44487080

900-4RL Option Board

Installation Instructions

⚠ DANGER ⚠

To avoid risk of electric shock, turn off AC power to power supply before installing or wiring option board.

900-4RL Specifications	
Inputs I1-I4	Dry contacts required (Closed = Active) Connect control contacts between SC (Signal Common) and any input
Outputs O1-O4	• Form C contacts rated 30VDC, 3A (Dry) • 12/24VDC, 3A (Wet) when AC powered • 9.6-13.2VDC or 19.2-26.4VDC when battery powered • May be used with PS914 to power EL device at 24VDC, 16A, 300ms • Maximum load cannot exceed power supply ratings or 6A for outputs combined
Board Input Power	Board requires 0.18A max. of power supply output current to operate
Temperature Range	32°-120°F (0°- 49° C)
Compliance	UL 294, ULC-S318, RoHS, & FCC Part 15
Fire Alarm Input	Accepts 900-FA Fire Alarm Board (Optional)

1 Install 4RI Board(S) into Power Supply

1a Review Available 900-4RL Mounting Locations (Gray)

PS902

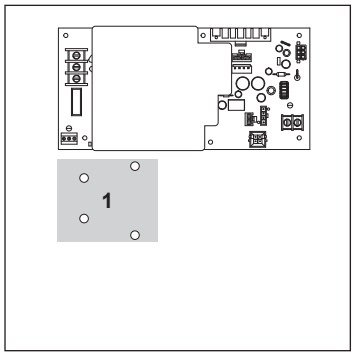

PS904

PS914

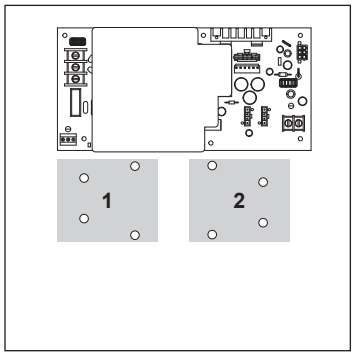

PS906

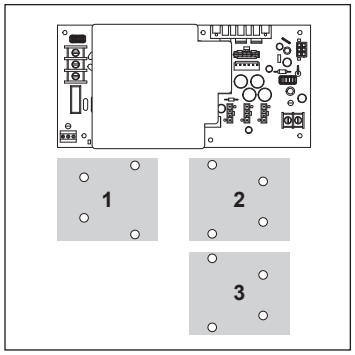

Refer to installation instructions for compatible supply models - PS902, PS904, PS906, and PS914.

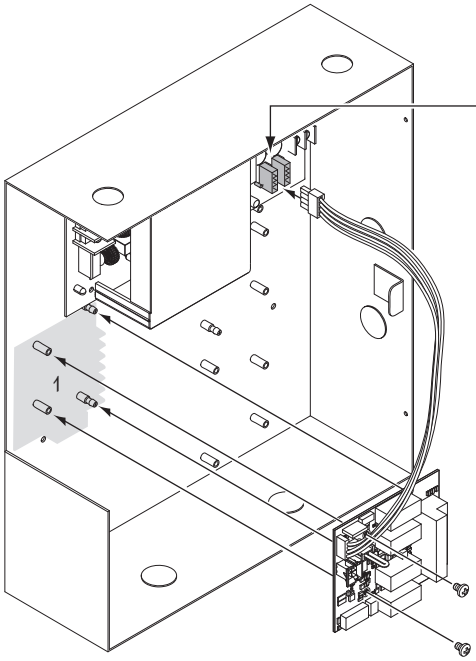

1b Plug 4RL Cable into any Available Option Connector

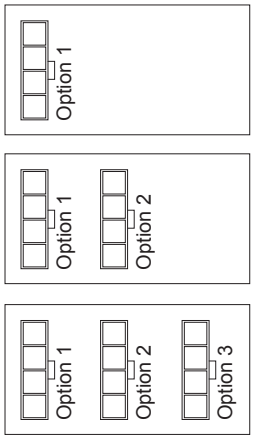

PS902

PS904, 914

PS906

1c Secure Board(s) with Screws

NOTE

For UL listed installations, use only UL listed locks and strikes

2 Choose Function of 900-4RI Board by Setting SW2 Dip Switches

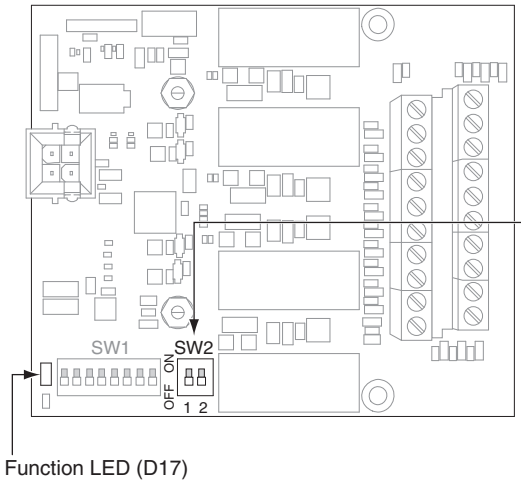

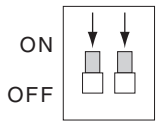

4TD **Four Zone Controller Function (4TD):**

Controls up to four inputs and four outputs with time delay. This is the default setting.

Function LED will blink one time every 5 seconds

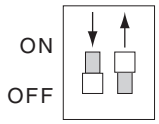

AO **Auto Operator Function (AO):**

Coordinates the unlocking of one or two zones with the signaling of an auto operator.

Function LED will blink two times every 5 seconds

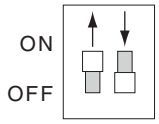

SI **Security Interlock Function (SI):**

Controls multi-door interlocks. Two through six door systems are possible (additional boards required for three to six doors).

Function LED will blink three times every 5 seconds

3 To Complete Configuration and Wiring, go to Appropriate Section

For 4TD: Go to pages 3-4

For AO: Go to pages 5-6

For SI: Go to pages 7-8

Basic Troubleshooting: Go to page 8

(Optional) Dry Contact Configuration

Powered Outputs (Default)

By default, all outputs provide12/24VDC

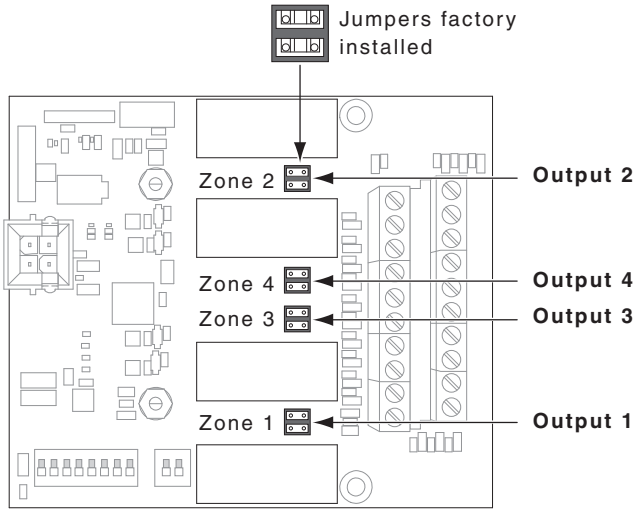

Dry Contact Outputs (Optional)

For dry contact outputs, remove appropriate jumpers and rotate 90˚, then reinstall (Zone 1 - Zone 4)

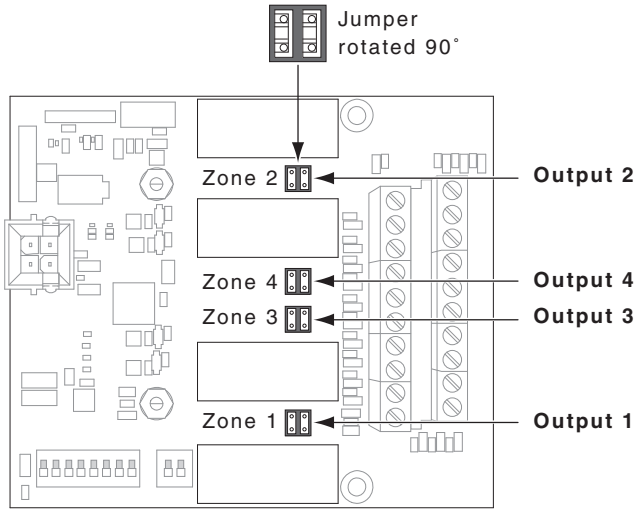

4TD - Set Time Delay Using SW1 Dip Switches

Summary of Operation

- Output turns “ON” when input is activated (closed).
- Time delay begins when input is released (opened).
- Locking Device output will remain “ON” during time delay.
- If I1-I4 inputs are wired together, outputs will sequence.

DIP switches on SW1 can be turned “ON” by moving them in the direction that the arrow is pointing. Switches below shown in “OFF” position

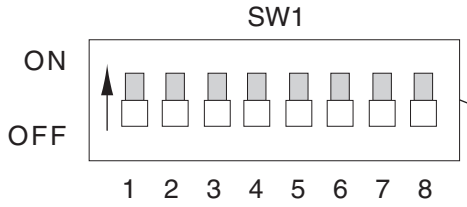

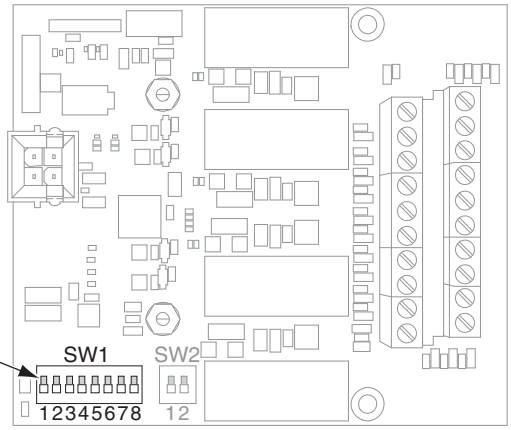

	Switch Number	4TD DIP Switch Definitions All switches shown in “OFF” position in wiring diagram
Enable Time Delay Allows you to choose which outputs will have the below time delay.	1	Turn “ON” to enable time delay for Locking Device 1
	2	Turn “ON” to enable time delay for Locking Device 2
	3	Turn “ON” to enable time delay for Locking Device 3
	4	Turn “ON” to enable time delay for Locking Device 4
Set Time Delay (0-75 seconds, 5 second increments) 0 Sec: Switches 5-8 “OFF” 75 Sec: Switches 5-8 “ON”	5	Adds 5 seconds to the time delay when “ON”
	6	Adds 10 seconds to the time delay when “ON”
	7	Adds 20 seconds to the time delay when “ON”
	8	Adds 40 seconds to the time delay when “ON”

4TD Input / Output Terminal Block Definitions	
Input 1	Access Control 1
Input 2	Access Control 2
Input 3	Access Control 3
Input 4	Access Control 4
Output 1*	Lock 1
Output 2*	Lock 2
Output 3*	Lock 3
Output 4*	Lock 4
*See page 2 for dry contacts	

4TD - Wiring Example - Fail Secure

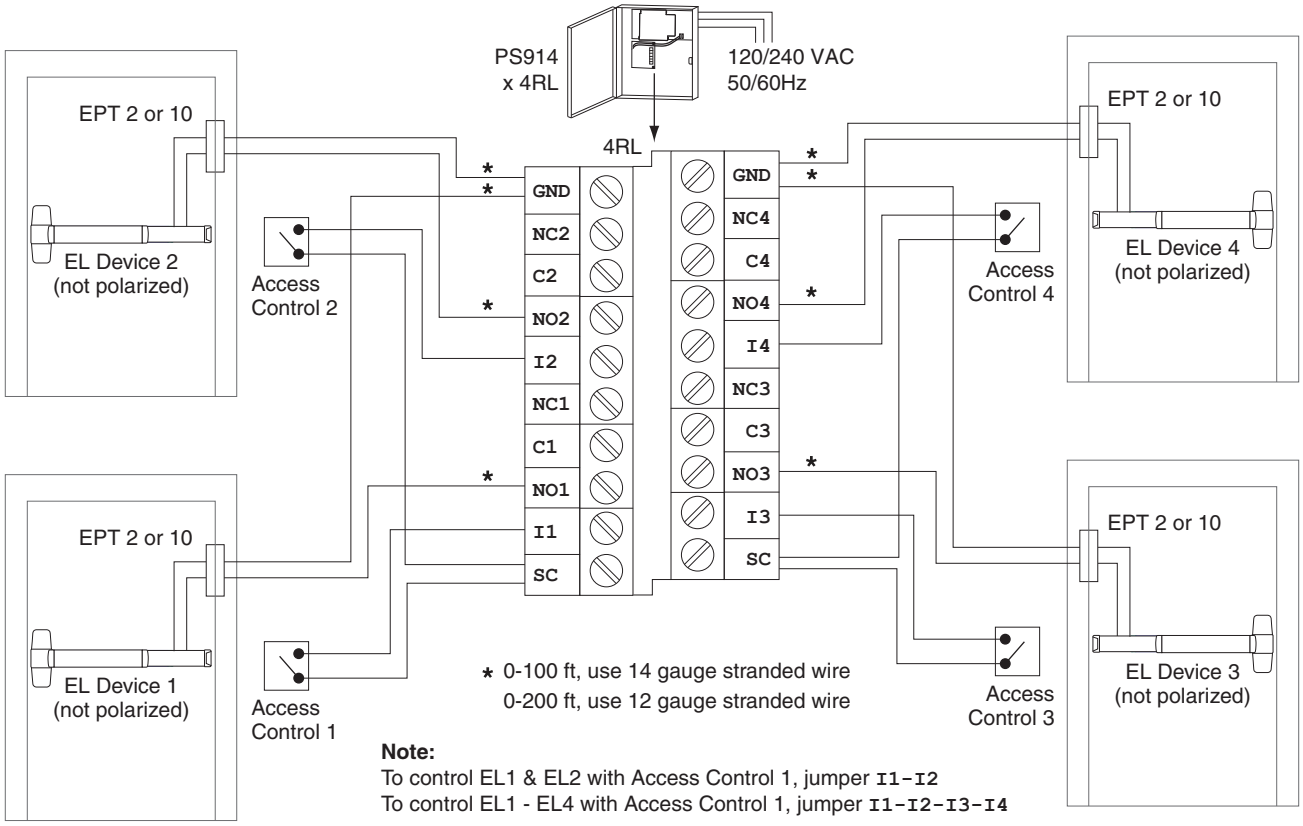

Note:
To control EL1 & EL2 with Access Control 1, jumper `I1-I2`
To control EL1 - EL4 with Access Control 1, jumper `I1-I2-I3-I4`

Note:
Fail secure output only allowed if approved
by Authority Having Jurisdiction

4TD - Wiring Example - Fail Safe

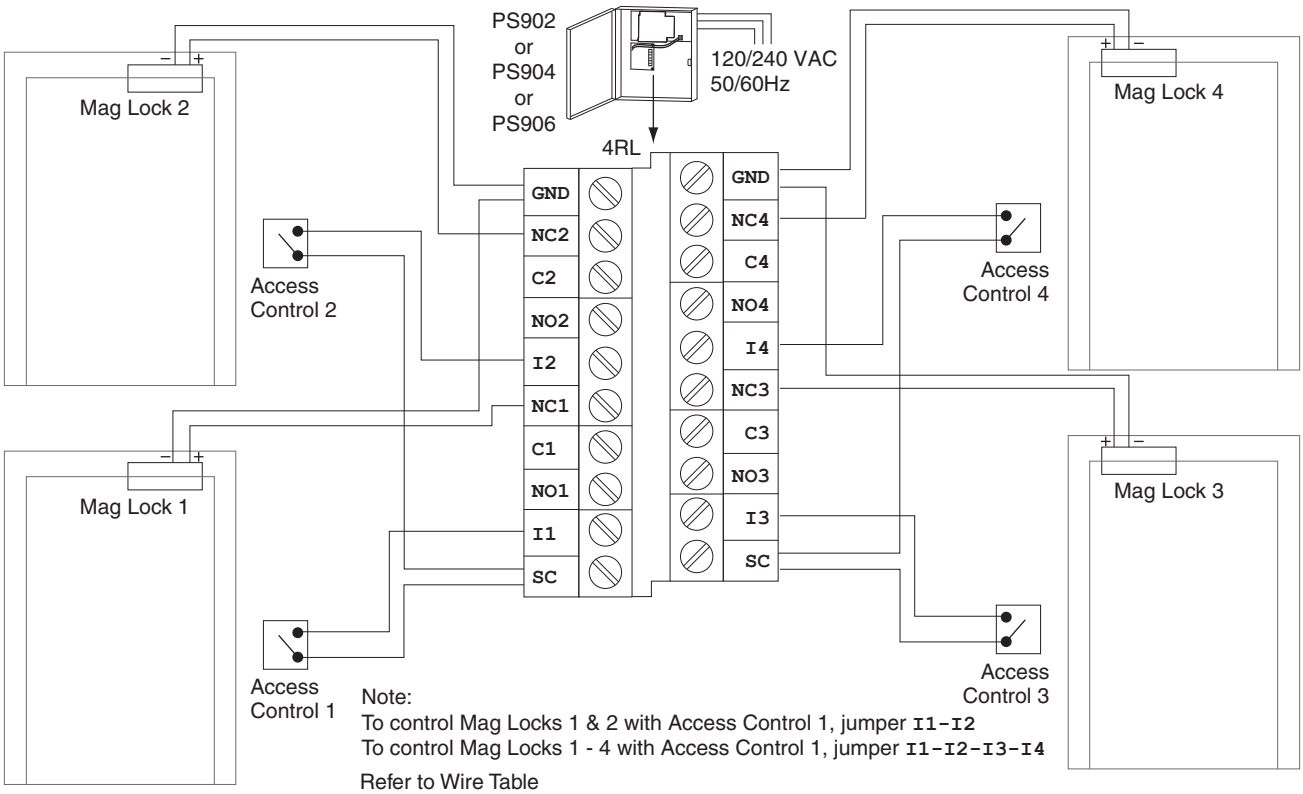

Note:
To control Mag Locks 1 & 2 with Access Control 1, jumper `I1-I2`
To control Mag Locks 1 - 4 with Access Control 1, jumper `I1-I2-I3-I4`

Refer to Wire Table
(page 7)

AO - Set Configuration Using SW1 Switches

DIP switches on SW1 can be turned “ON” by moving them in the direction that the arrow is pointing. Switches below shown in “OFF” position

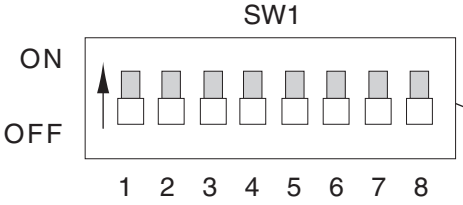

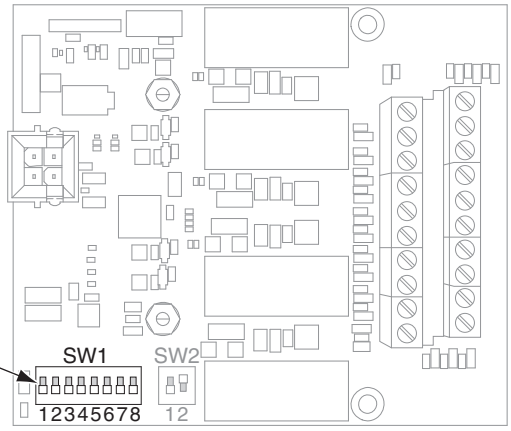

	SW1 Switch Number	AO DIP Switch Definitions All switches shown in “OFF” position in wiring diagram
Set Auto Operator Signaling Option Determines when the auto operator signal will be active	1 Off 2 Off	Operator is signaled when latch monitor switch becomes active. Monitor switch required
	1 On 2 Off	Operator is signaled 0.5 seconds after control switch becomes active. No monitor switch used.
	1 Off 2 On	Operator is signaled 1.0 seconds after control switch becomes active. No monitor switch used.
	1 On 2 On	Operator is signaled 1.5 seconds after control switch becomes active. No monitor switch used.
Not Used	3	Not used
Set Individual Mode or Sequential Mode Individual Mode - One input will trigger one locking device. Sequential Mode - One input will trigger two locking devices.	4	Turn “OFF” (default) to enable Individual Mode (single doors). Turn “ON” to enable Sequential Mode (double doors).
Set Time Delay* (0-30 seconds, 2 second increments) 0 Sec: Switches 5-8 “OFF” 30 Sec: Switches 5-8 “ON”	5	Adds 2 seconds to the time delay when “ON”
	6	Adds 4 seconds to the time delay when “ON”
	7	Adds 8 seconds to the time delay when “ON”
	8	Adds 16 seconds to the time delay when “ON”
* Time Delay begins when an input is released.		

AO INPUT / OUTPUT TERMINAL BLOCK DEFINITIONS	
Input 1	Access Control 1
Input 2	Lock Monitor 1
Input 3	Access Control 2
Input 4	Lock Monitor 2
Output 1*	Lock 1
Output 2*	AO Signal 1
Output 3*	Lock 2
Output 4*	AO Signal 2
*See page 2 for dry contacts	

AO - Wiring Example - Two Single Doors

Summary of Operation

For each door, access control input unlocks door.

Latch monitor (LX) triggers auto operator.

Single Door Board Configuration

1. Position jumpers for dry contact for outputs 2 and 4 (see page 2).
2. Turn on switches 5 and 6 on SW1 (6 second time delay).
3. If LX is not used, turn on switch 1 on SW1.

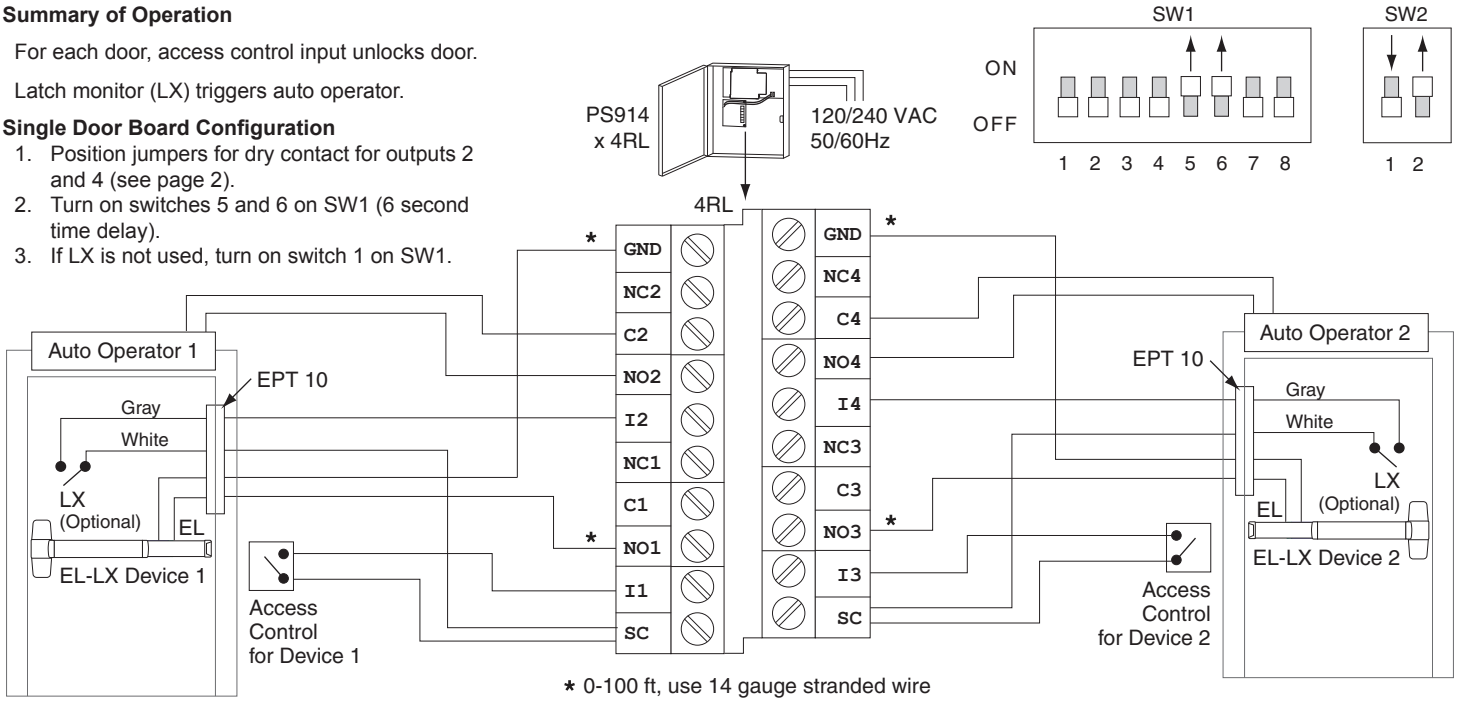

* 0-100 ft, use 14 gauge stranded wire
0-200 ft, use 12 gauge stranded wire

AO - Wiring Example - Double Doors

Summary of Operation

Access control input unlocks both doors. Both latch monitors (LX) trigger auto operators.

Double Door Board Configuration

1. Position jumpers for dry contact for outputs 2 and 4 (see page 2).
2. Turn on switches 4, 5, and 6 on SW1 (6 second time delay).
3. If LX is not used, turn on switch 1 on SW1.

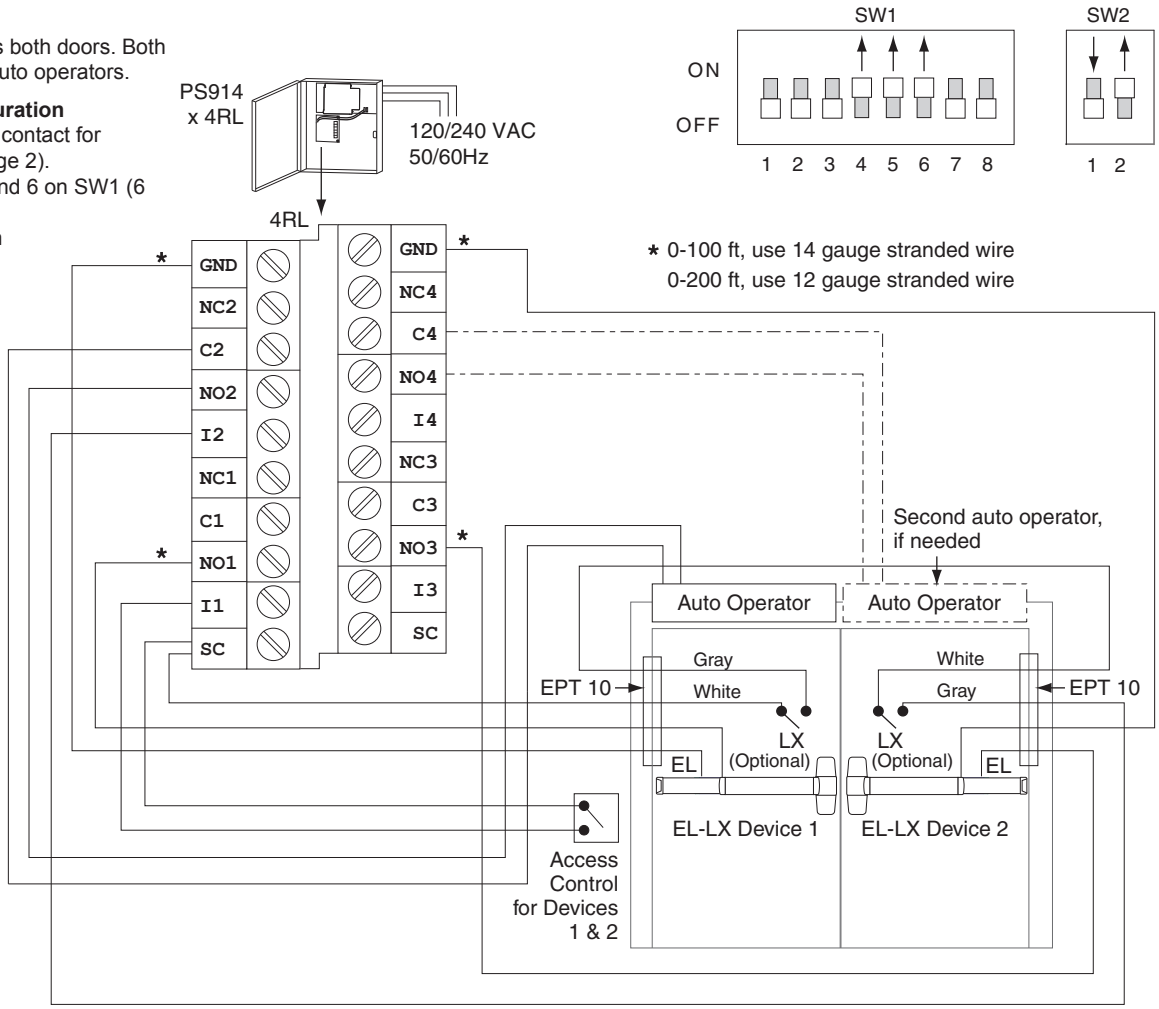

* 0-100 ft, use 14 gauge stranded wire
0-200 ft, use 12 gauge stranded wire

Note:
Fail secure output only allowed if approved by Authority Having Jurisdiction

Refer to Wire Table (page 7)

SI - Configure SW1 DIP Switches

DIP switches on SW1 can be turned “ON” by moving them in the direction that the arrow is pointing. Switches below shown in “OFF” position

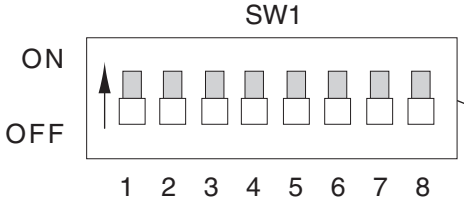

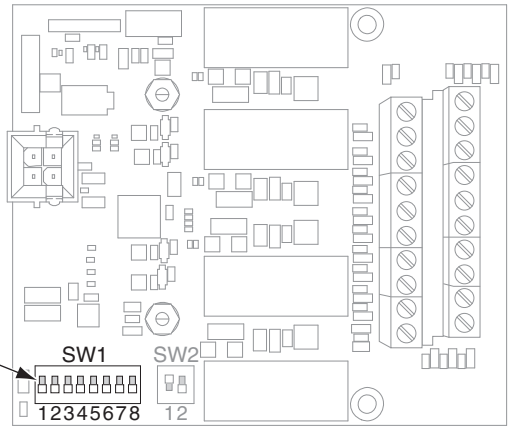

	Switch Number	SI DIP Switch Definitions All switches shown in “OFF” position in wiring diagram
Enable Time Delay Allows you to choose which outputs will have the below time delay.	1	Turn “ON” to enable time delay for Locking Device 1
	2	Turn “ON” to enable time delay for Locking Device 2
Enable Interlock	3	Turn “ON” to remove O2 from interlock (Allows a single independent door)
	4	Turn “ON” for global interlock (interlocks with other SI boards that have this switch “ON”)
Set Time Delay (Output Active)*	5	Adds 2 seconds to the time delay when “ON”
(0-30 seconds, 2 second increments)	6	Adds 4 seconds to the time delay when “ON”
0 Sec: Switches 5-8 “OFF”	7	Adds 8 seconds to the time delay when “ON”
30 Sec: Switches 5-8 “ON”	8	Adds 16 seconds to the time delay when “ON”
*See page 2 for dry contacts		

SI Input / Output Terminal Block Definitions	
Input 1	Access Control 1
Input 2	Access Control 2
Input 3	Lock Monitor 1
Input 4	Lock Monitor 2
Output 1*	Lock 1
Output 2*	Lock 2
Output 3*	Follows Output 1 by .5 Sec
Output 4*	Follows Output 2 by .5 Sec
*See page 2 for dry contacts	

Global Interlock Switch Setting Examples						
SI Board #1		SI Board #2		SI Board #3		Application
SW1-3	SW1-4	SW1-3	SW1-4	SW1-3	SW1-4	
Off	Off	Off	Off	Off	Off	Each SI board is a standalone, 2-door interlock.
Off	On	Off	On	Off	On	6-door interlock by setting all boards “global”.
Off	On	On	On			A three-door interlock, plus an additional independent door on output 2 of SI Board #2.
Off	On	Off	On	Off	Off	4-Door interlock (SI Board #1,2) and a standalone 2-door interlock (SI Board #3).

Wire table (suggested maximum)			
Wire Ga (AWG)	Device Current (Amps DC)	Output* (max. ft)	Input (max. ft)
14	0.3	850	
	0.5	500	
18	0.3	340	1200
	0.5	200	
12	Using EL device with EPT or Door Loop	200	
14	(PS914 required)	100	
12	Using EL device with Electric Hinge/Pivot	150	
14	(PS914 required)	75	

*Wiring allows for 10% voltage drop at device current at 12 or 24VDC

Max. ft = one way distance between power supply and device

SI - Wiring Example - 2 to 6 Door Interlock, Normally Locked

SI Configuration

1. Turn on switches 1, 2, 4, 5, and 6 on SW1.
2. Install 2 doors per SI board.
3. Add up to 2 additional SI boards for a total of 6 door interlock per power supply:
   - PS902 (2 doors maximum)
   - PS904 (4 doors maximum)
   - PS906 (6 doors maximum)

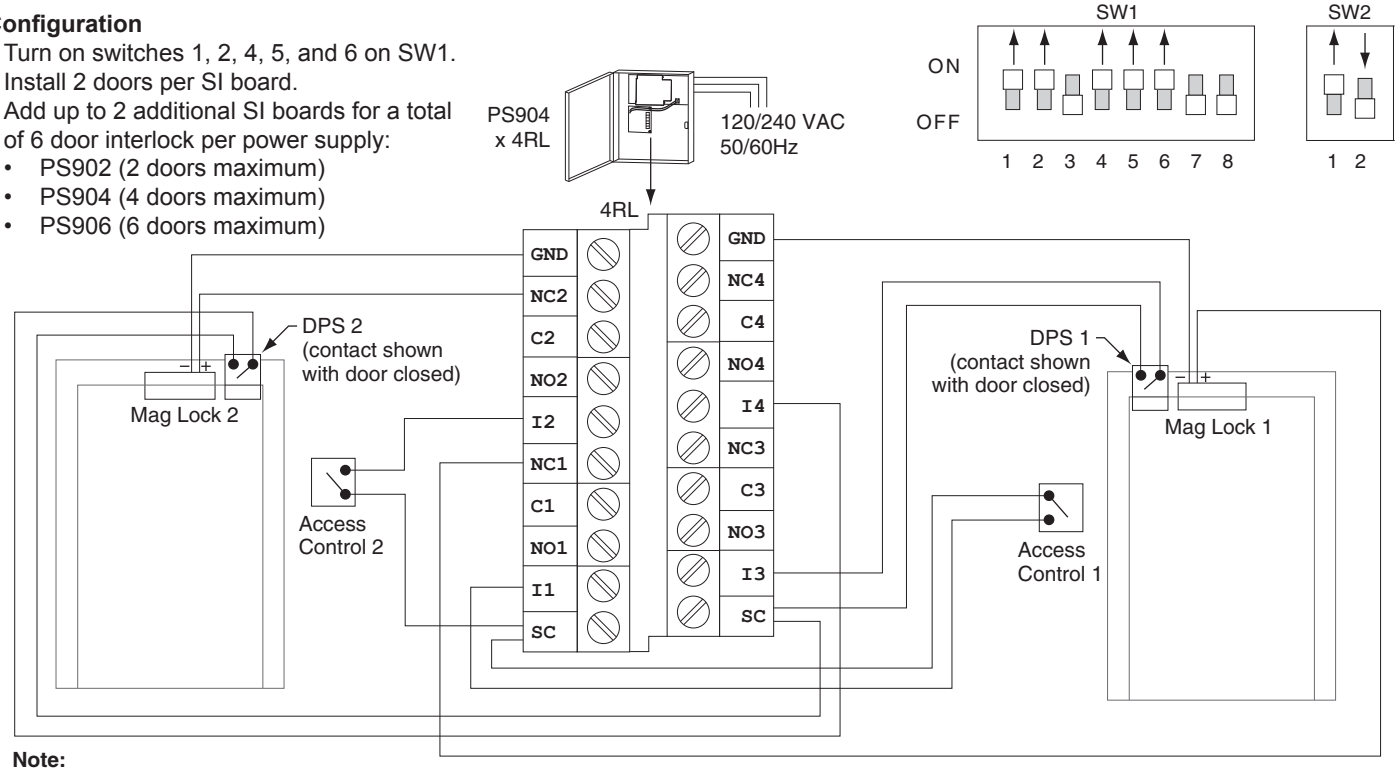

Note:
Fail secure output only allowed if approved by Authority Having Jurisdiction

Refer to Wire Table (page 7)

Basic Troubleshooting for All Functions

Symptom	Check
900-4RL Function LED (yellow) is not blinking, and inputs and outputs are inactive	Verify 900-4RL cable is plugged into an “option” connector on the main board.
	Check AC wiring and AC breaker.
	Check PS-900 main board F1 fuse.
	Use voltmeter to verify 12 VDC or 24 VDC output on PS-900 main board.
900-4RL Function LED (yellow) is blinking, but inputs and outputs are inactive	If 900-FA option is installed onto 900-4RL, verify fire alarm contacts are closed across FA1 and FA2.
	If 900-FA option is not installed, then verify jumper wire is installed into FA-JMPR connector on the 4RL board.
Inputs and outputs behaving incorrectly.	Verify 2-position DIP switch is set for proper function. Watch yellow LED to confirm 4RL function setting . See page 2. (Verify each DIP switch is pushed into its fully-on or fully-off position.)
	Verify 8-position DIP switch is set properly for your application. If you are unsure of proper settings, contact Technical Services for assistance. (Verify each DIP switch is pushed into its fully-on or fully-off position.)
	Verify wiring for all input and output hardware is connected to proper terminals. (Reminder: If 900-4RL is mounted in location 1, top terminals will be GND. If 900-4RL mounted in location 2 or 3, top terminals will be SC.)

NOTE

When installation is complete, secure enclosure door with screws or keylock.

ALLEGION

44487080 Rev. 01/14-b